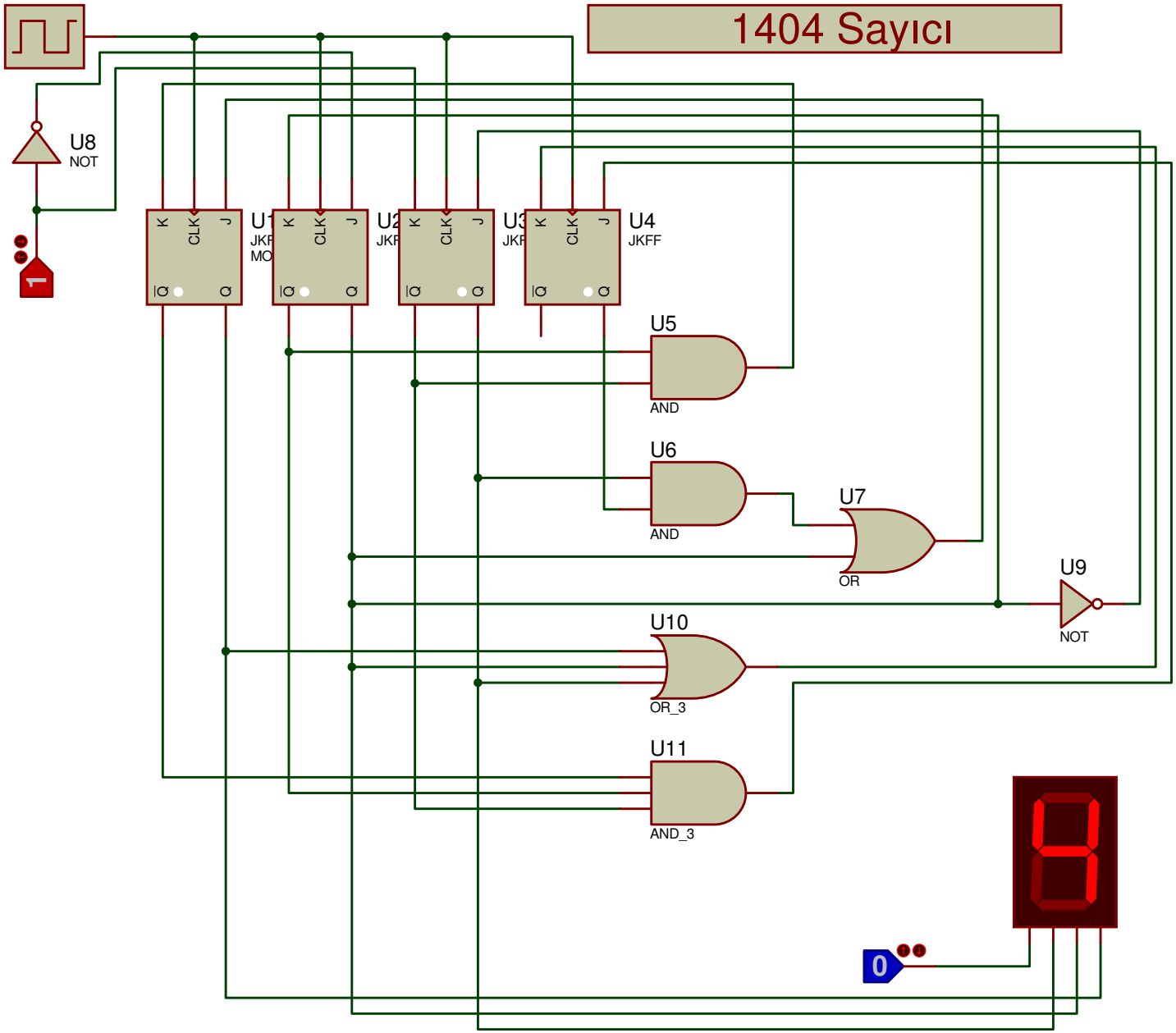
1404 Sayıcı
U8
NOT
U1
JKFF
U2
JKFF
U3
JKFF
U4
JKFF
K
CLK
J
Q
U5
AND
U6
AND
U7
OR
U9
NOT
U10
OR_3
U11
AND_3
1
0